WE MAKE
AV CONTROL SYSTEMS
- just smarter

About us

Neets was founded in 1999 and is a privately held company based in Horsens, Denmark.

For more than 1½ decade, we have pursued a course of customer-driven development and innovation.

Today, we are one of the top brands when it comes to intuitive AV control

Neets is now Scandinavia's leading supplier of AV control systems, and is known throughout Europe as a forward-looking company with fresh ideas and solid customer support.

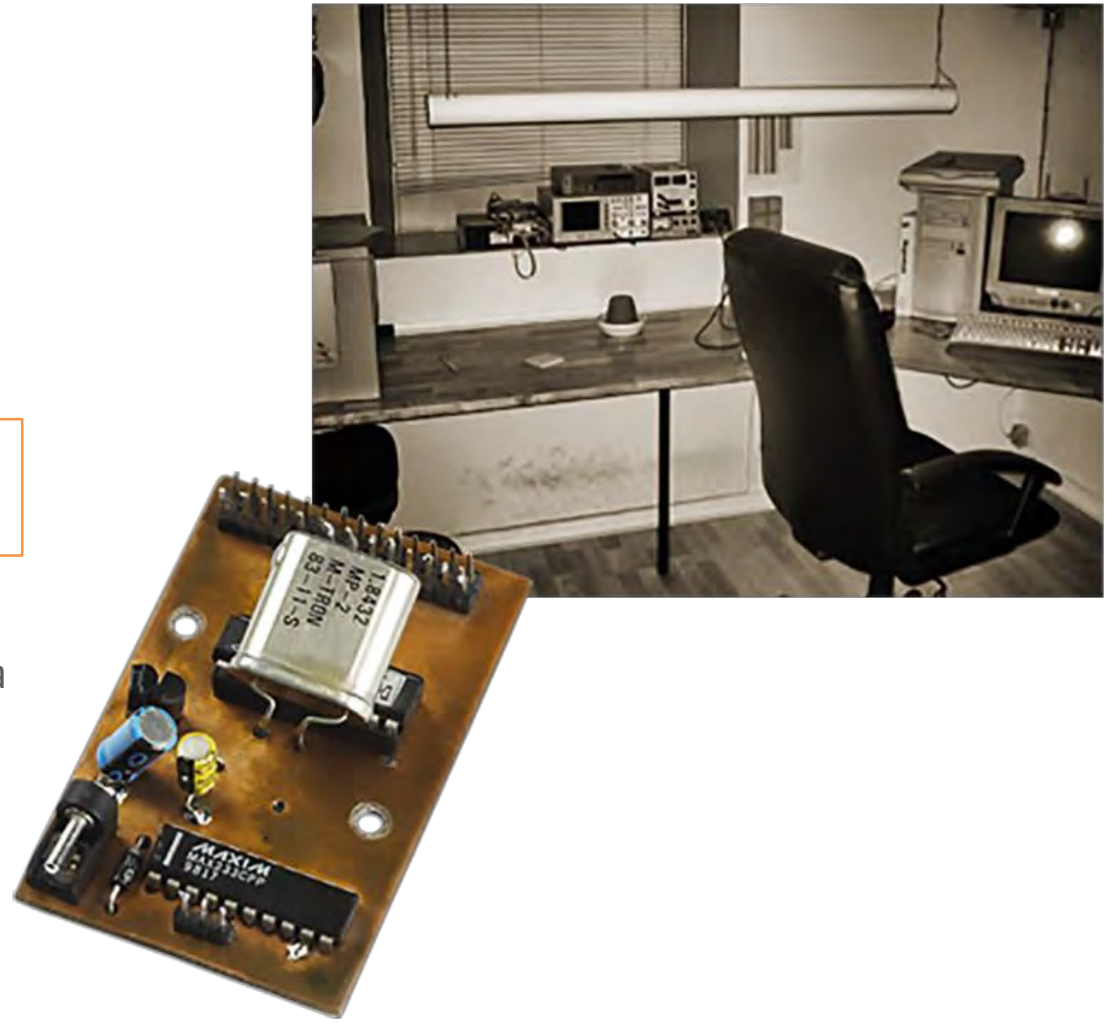

Worldwide

More than 100.000 control systems installed in classrooms & meeting rooms worldwide

Neets is more than just control systems…

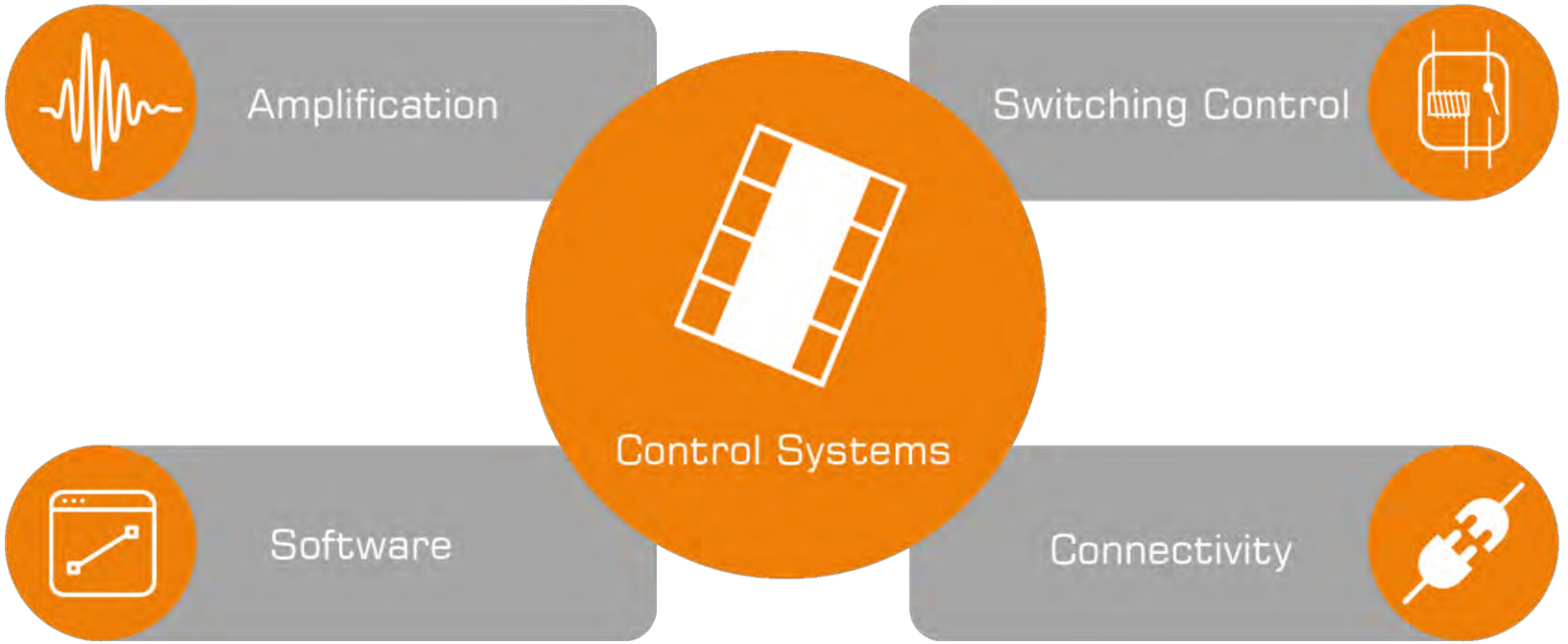

Neets Product Range

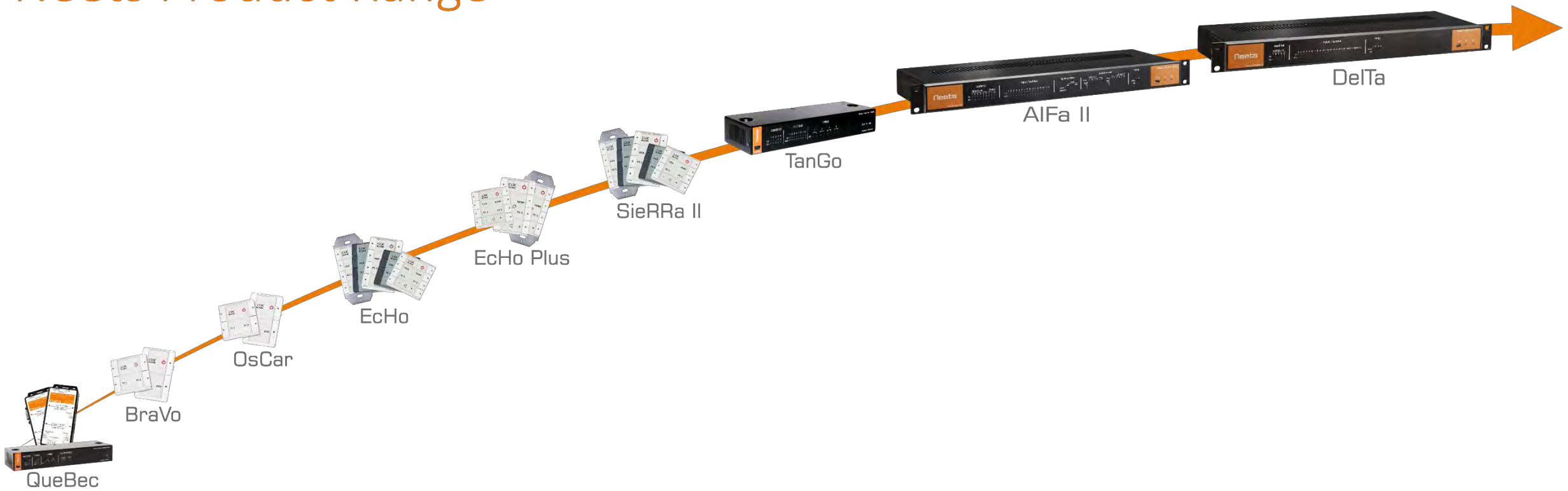

Neets Control – QueBec

Straightforward AV Control

we make AV control systems -just smarter

QueBec II
Automatic Projector Control
for classrooms & meeting rooms
Neets
We make AV Control Systems

Neets Control – QueBec

benefits for the integrator

- AV control system for new or retro-fit installations
- 2xHDMI (QueBec III) or 1xHDMI and 1xVGA (QueBec II)
- Foolproof simplicity - VGA or HDMI signal starts sequence
- Automatic priority switching. Works with VGA or HDMI signals
- 1 x RS-232 (TX) or 1 x IR (emitter)
- 3 x I/O ports for screen up/down and external mute button (optional)
- Fast installation using Euroblock connectors
- USB port for configuration

USB Programming

VGA loop thru for
auto power on/off :

HDMI loop thru for
auto power on/off :

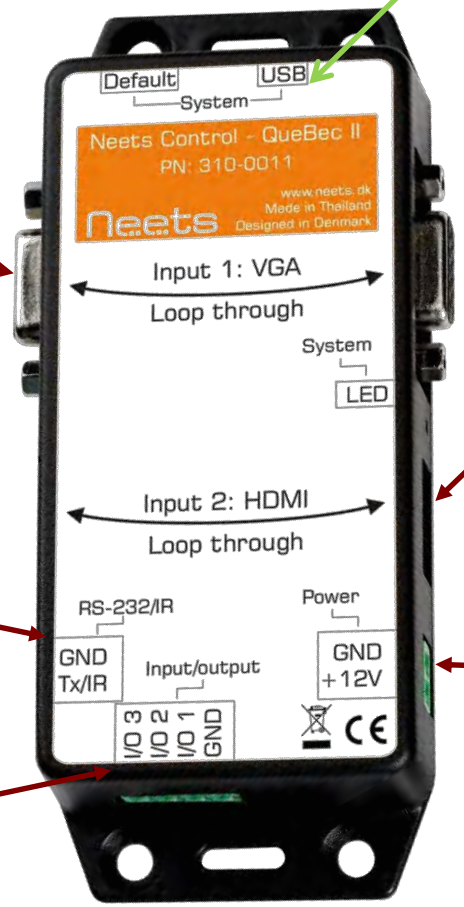

1 RS-232/IR

Power

3 I/O:

Open drain output

Neets Control – QueBec Pro

- AV control system for new or retro-fit installations
- 3xHDMI and 1xVGA
- Automatic priority switching. Works with VGA or HDMI signals
- Latest active source is automatically selected and displayed

Neets Control – QueBec Pro

- 3 x HDMI
- 1 x VGA (no conversion to HDMI)
- 2 Low voltage relays (30 volt - 0,5A)
- 2 x RS232 or 4 IR ports
- LAN port for control of 2 devices
- PoE for powering the controller
- 2 x General purpose I/O's

Indication and test buttons on the front

Neets Control – BraVo

Flexible, Reliable and Affordable AV Control

we make AV control systems -just smarter

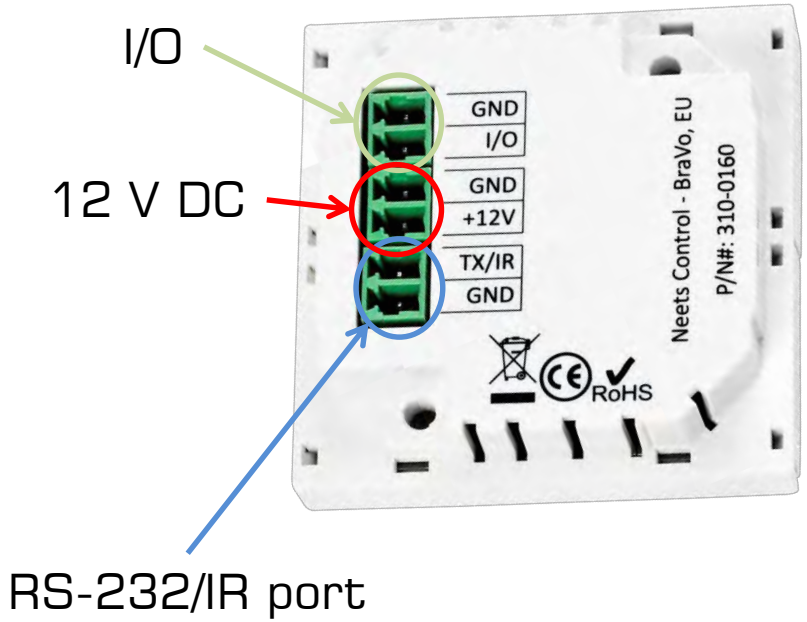
I/O
12 V DC
RS-232/IR port
GND
I/O
GND
+12V
TX/IR
GND
Neets Control - BraVo, EU
P/N#: 310-0160
RoHS

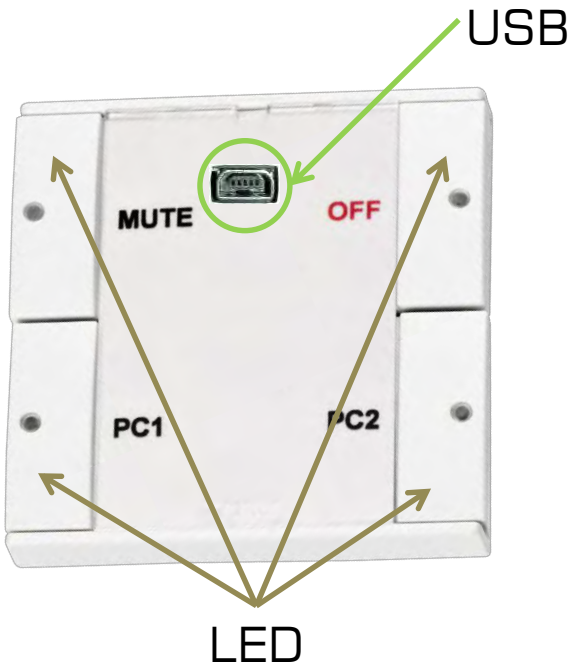
USB
MUTE
OFF
PC1
PC2
LED

Neets Control – OsCar

Cost-effective Networked AV Control

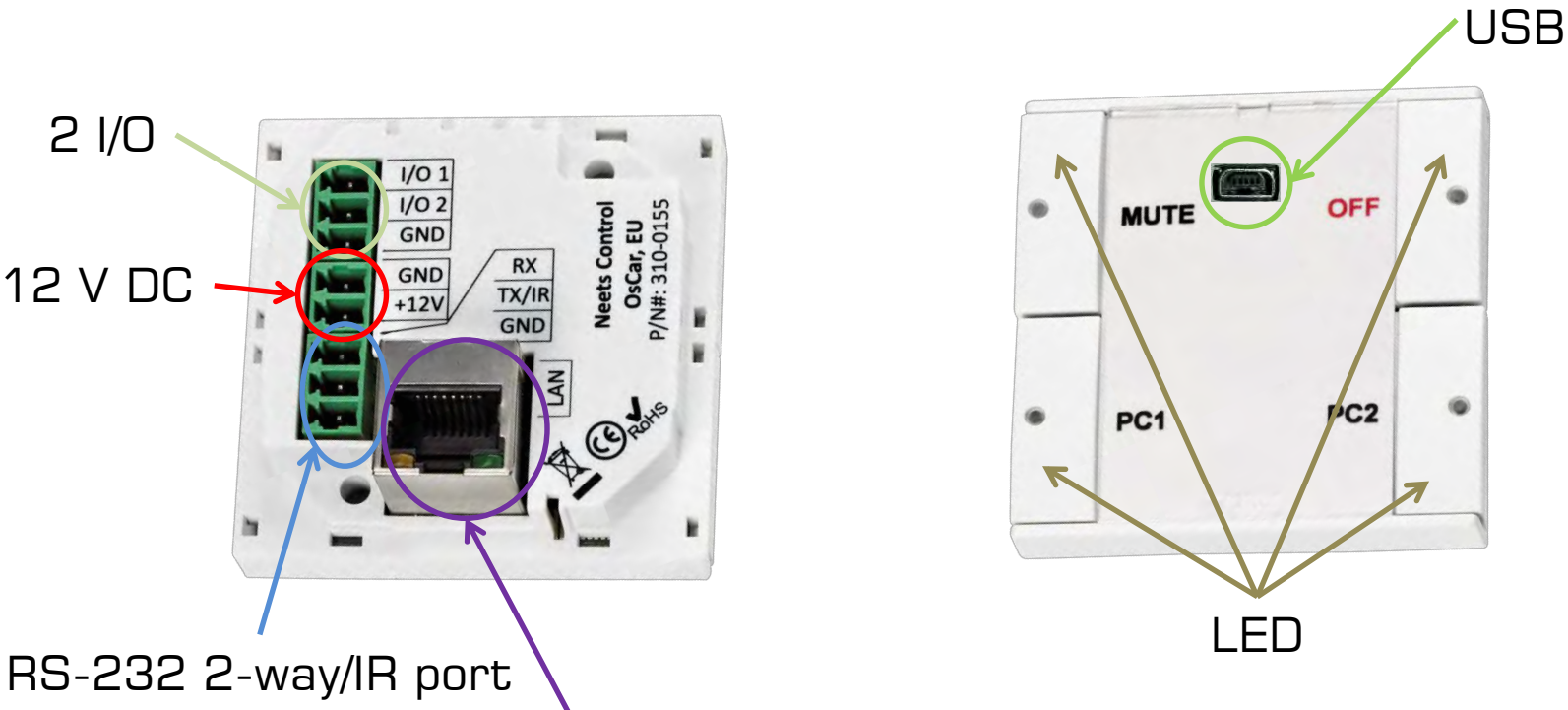
2 I/O
12 V DC
I/O 1
I/O 2
GND
GND
+12V
RX
TX/IR
GND
LAN
Neets Control
OsCar, EU
P/N#: 310-0155
RoHS
USB
MUTE
OFF
PC1
PC2
LED
RS-232 2-way/IR port
LAN: 2 Devices and 8 Neets expansion products
Graphical interface (Fixed layout)

Neets Control – EcHo

Reliable and Intuitive AV System Control

Neets Control – EcHo

benefits for the integrator

- 8-Button AV control system
- 8 Freely configurable keypad buttons
- 1 Bi-directional RS-232 port
- 1 Uni-directional RS-232 or IR port
- 3 General Purpose I/O ports
- 1 NEB port (Neets Expansion Bus) - add 2 NEB extensions
- 1 front USB port – for configuration, uploading and downloading project files
- Easy installation –fits wall outlet box and frames (DK, EU or UK)

Included: Configuration through our free and no-license software: Neets Project Designer

12 V DC

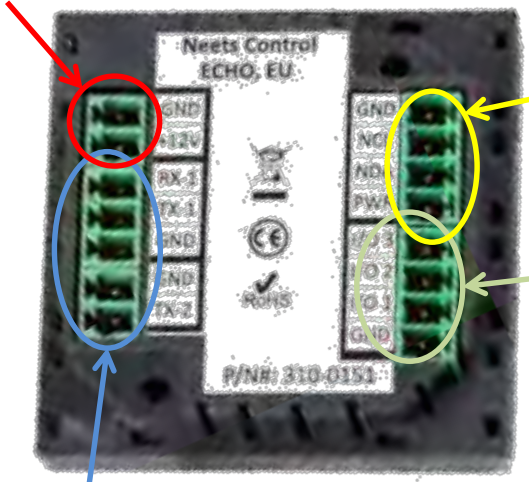

Neets Extension bus(NEB)

I/O

RS-232 and IR ports

USB

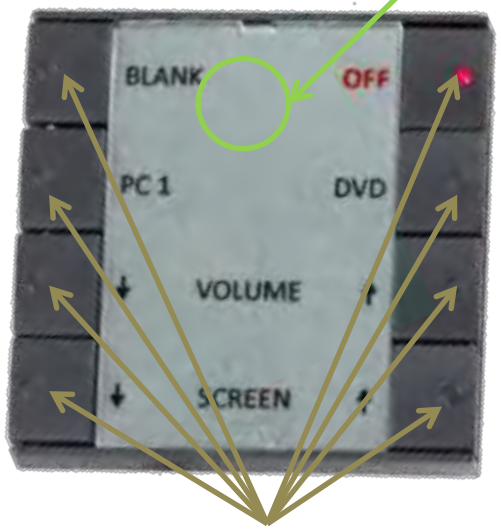

LED

Neets Extension Bus

expanding control systems

The Neets Extension Bus (NEB) is makes it possible to add keypads, level control & extra ports to the Neets control system which support NEB.

NEB Keypad

The NEB Keypad has 8 LED:

- Add extra keypads to your installation
- Red colour for EcHo & EcHo Plus
- Multicolour for SieRRa II, AlFa II & DelTa
- In DK & EU sizes. White or Anthracite

NEB Level Control

The NEB Level Control for easy control:

- Level button with turn function and indication
- Push to mute and on-mute the sound.
- 5 LED shows status of the level.
- In DK & EU sizes. White only

NEB Port Expansion

The NEB Port Expansions adds ports:

- 1 RS-232 port Rx/Tx.
- 1 RS-485 port Rx/Tx.
- 2 General Purpose I/Os.
- In DK & EU sizes. White only

Neets Control – EcHo Plus

8-Button Keypad with Remote Monitoring

we make AV control systems -just smarter

Neets Control – EcHo Plus

benefits for the integrator

- 8-Button AV control system with Remote Monitoring
- 8 Freely configurable keypad buttons
- Email notifications and warnings
- 1 Bi-directional RS-232 port
- 1 Uni-directional RS-232 or IR port
- 1 Ethernet port - used for controlling 2 LAN devices
- 3 General Purpose I/O ports
- 1 NEB port (Neets Expansion Bus) - add 2 extensions
- 1 front USB port – for configuration, uploading and downloading project files
- Controlled through iOS/Android touch devices – fixed user interface
- Easy installation –fits wall outlet box and frames (DK, EU or UK)

Included: Configuration through our free and no-license software: Neets Project Designer

Neets Control – EcHo Plus

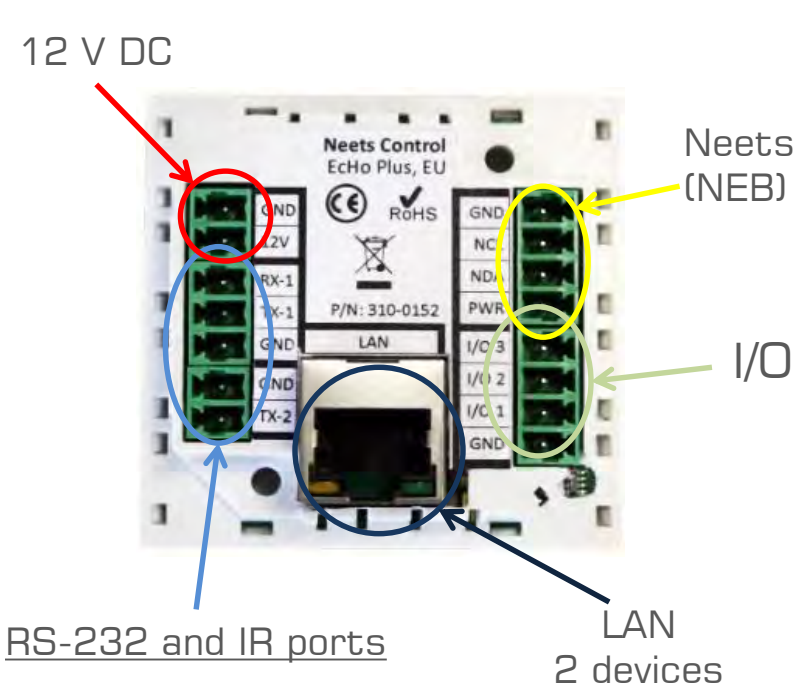

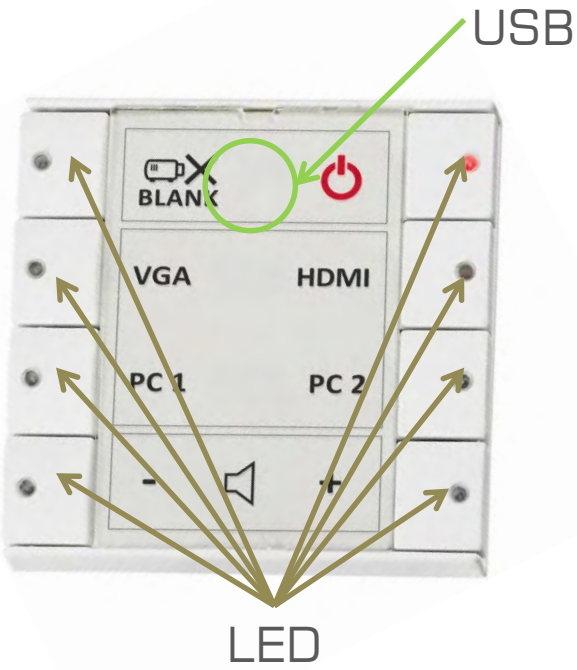

Homepage and E-mail notification

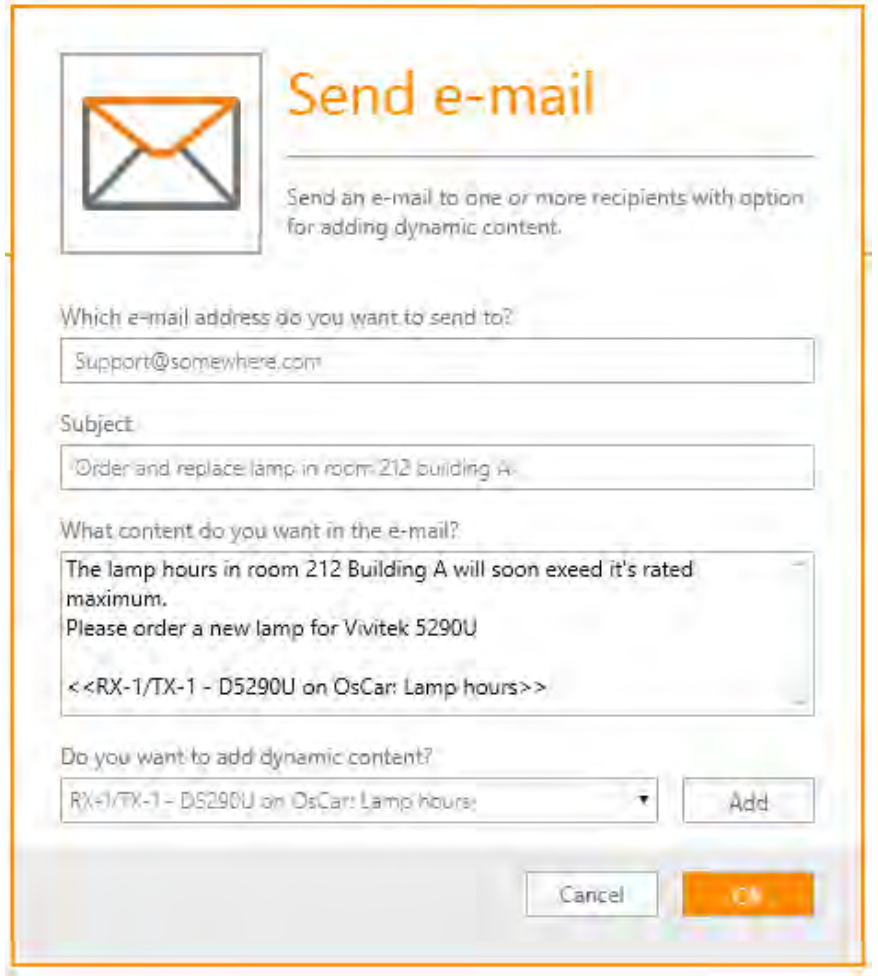

Neets Central Control

in short

Included: Global room monitoring with our Central Control software with:

Remote monitoring
Monitor rooms with EcHo Plus installed from one central location.

Lamp & Filter hours feedback
Get status on lamp and filter hours for your projectors for preventive maintenance

Grouping rooms, floors or levels
Control groups or individual rooms over network – e.g. one “POWER OFF” for all rooms

Remote AV support
From AV/IT support you can immediately get an overview of a room and test the functions

Software included free-of-charge
Neets Central Control software is a free-of-charge and no-license software

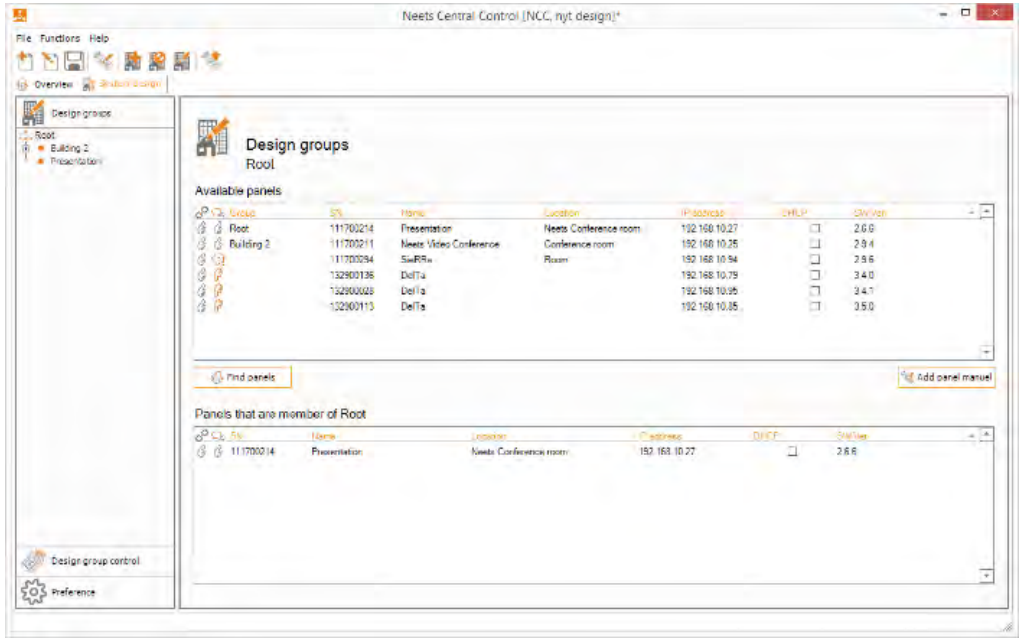

Neets Central Control

All software is FOC

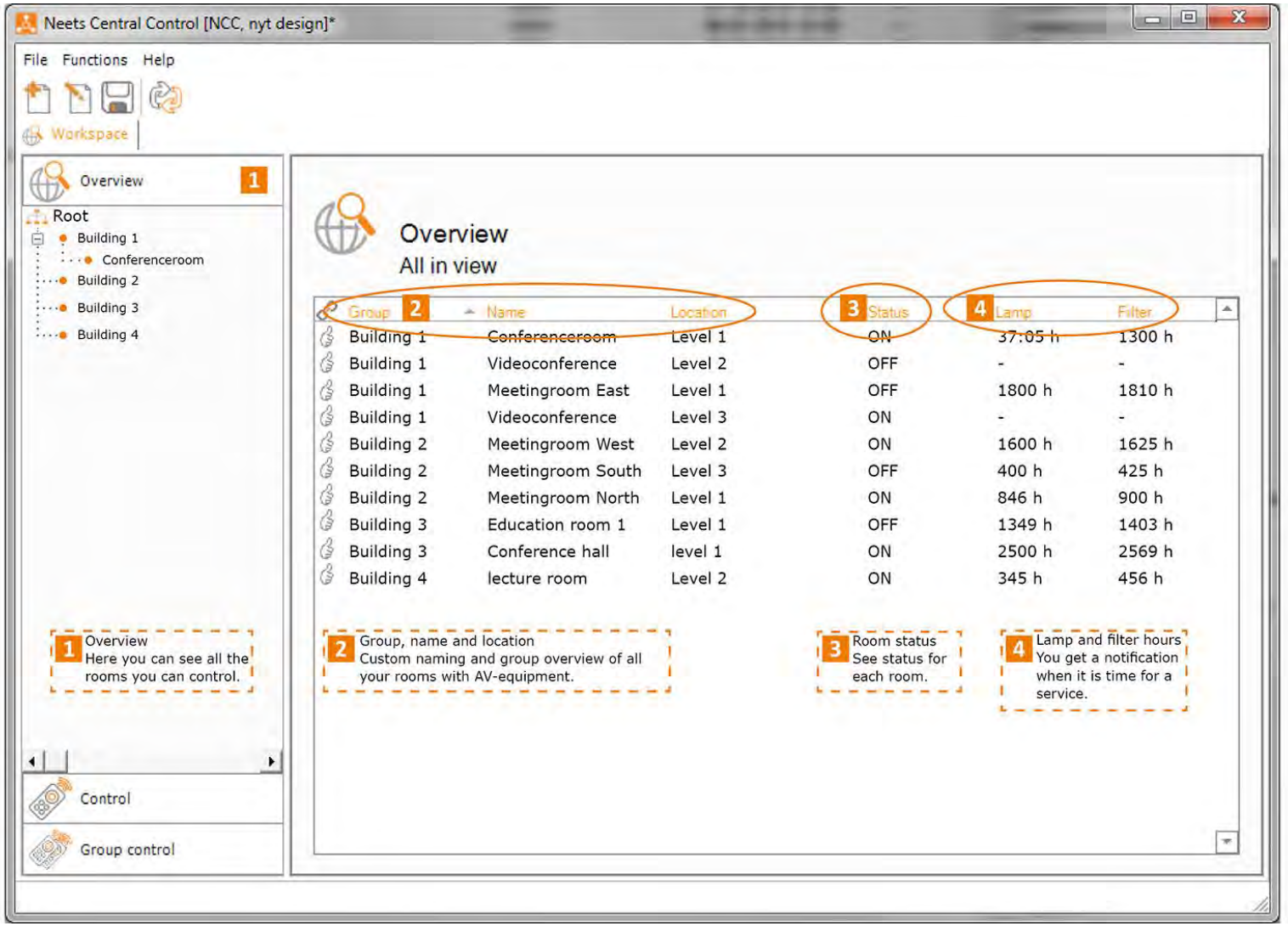

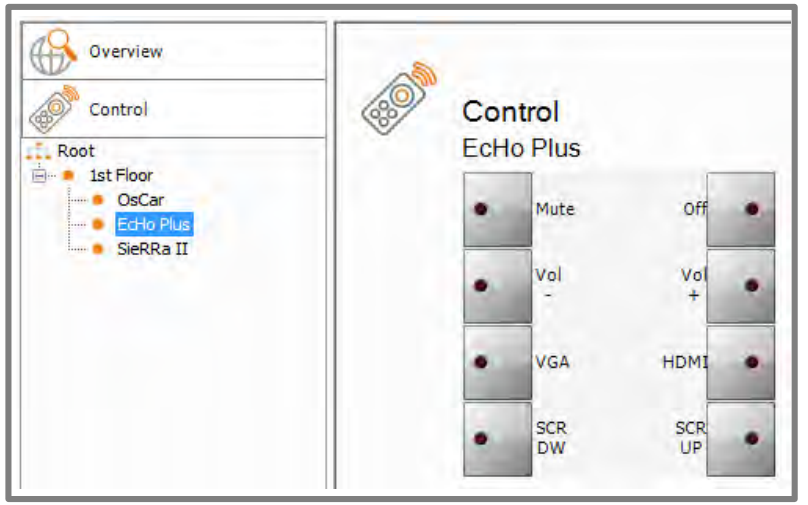

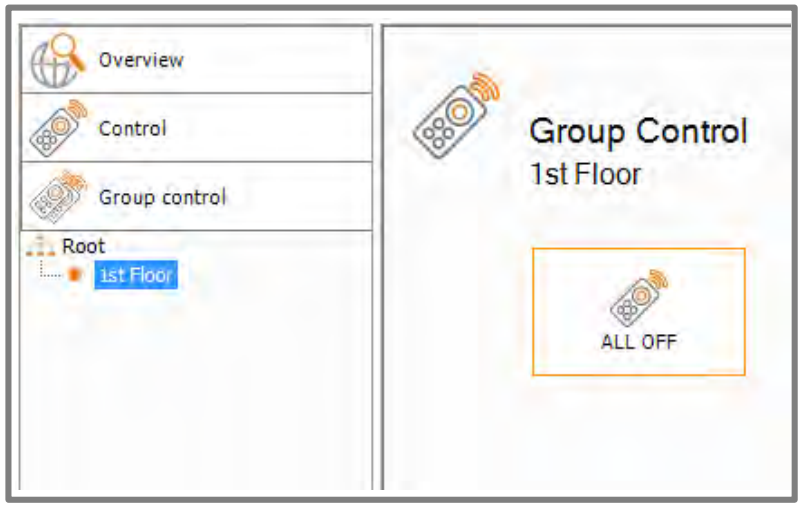

Neets Control – SieRRa II

8-Button Keypad with iOS/Android support

we make AV control systems -just smarter

Neets Control – SieRRa II

benefits for the integrator

- 8-Button AV control system with iOS/Android support
- 8 Freely configurable keypad buttons
- Email notifications and warnings
- 1 Bi-directional RS-232 port
- 2 Uni-directional RS-232 or 4 IR port
- 1 Ethernet port - used for controlling 10 LAN devices (NEW)
- PoE – Power over Ethernet support (NEW)
- 3 General Purpose I/O ports
- 1 NEB port (Neets Expansion Bus) – add 5 NEB extensions (NEW)
- 1 front USB port – for configuration, uploading and downloading project files
- Easy installation –fits wall outlet box and frames (DK, EU or US)
- Built in infrared learner, behind the third row of buttons

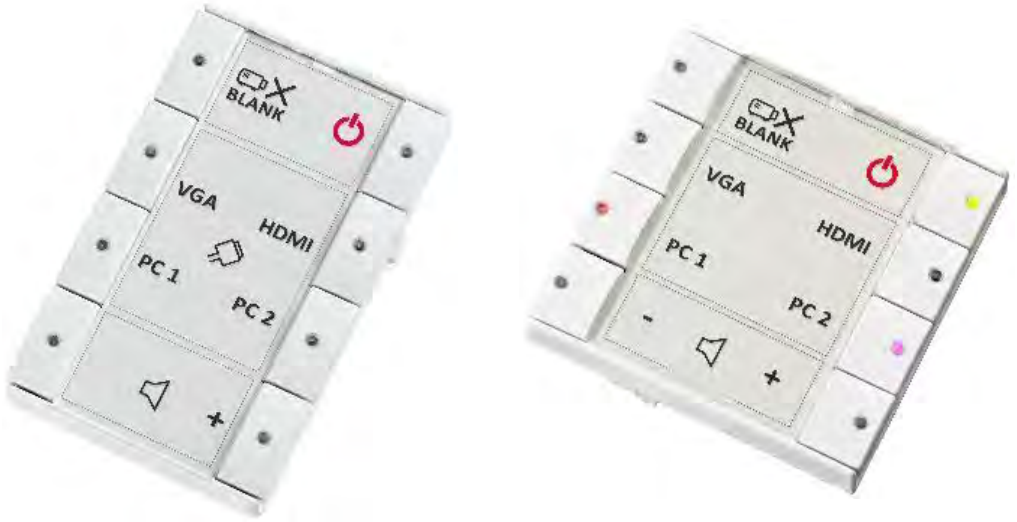

Included: Configuration through our free and no-license software: Neets Project Designer

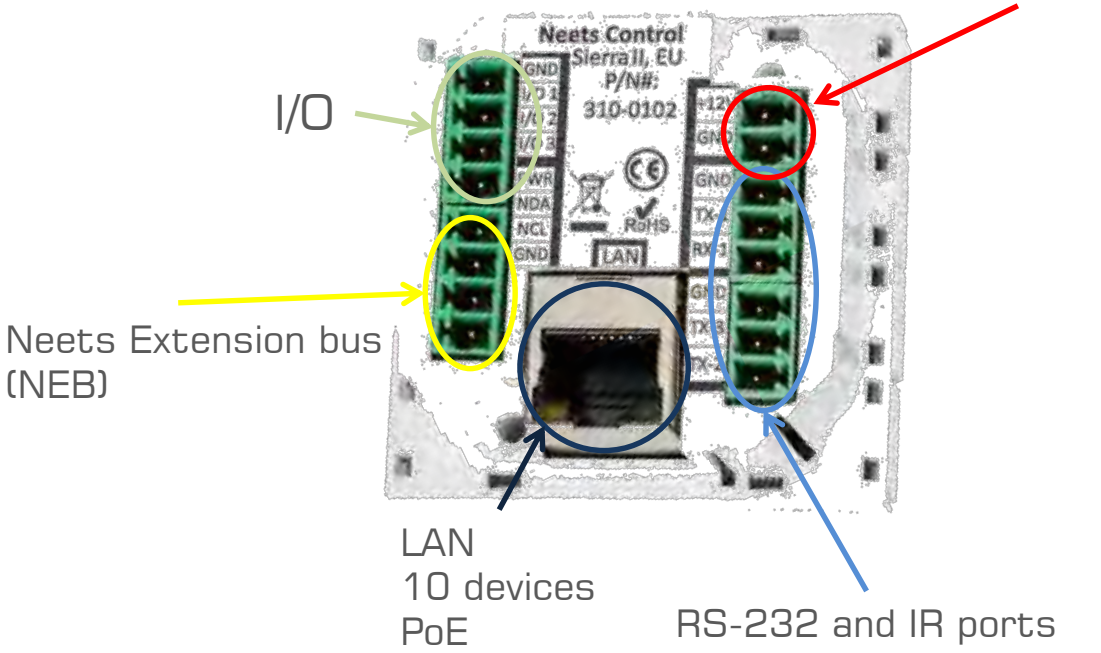
12 V DC
I/O
Neets Extension bus
(NEB)
LAN
10 devices
PoE
RS-232 and IR ports
Neets Control
Sierra II, EU
P/N#:
310-0102
LAN

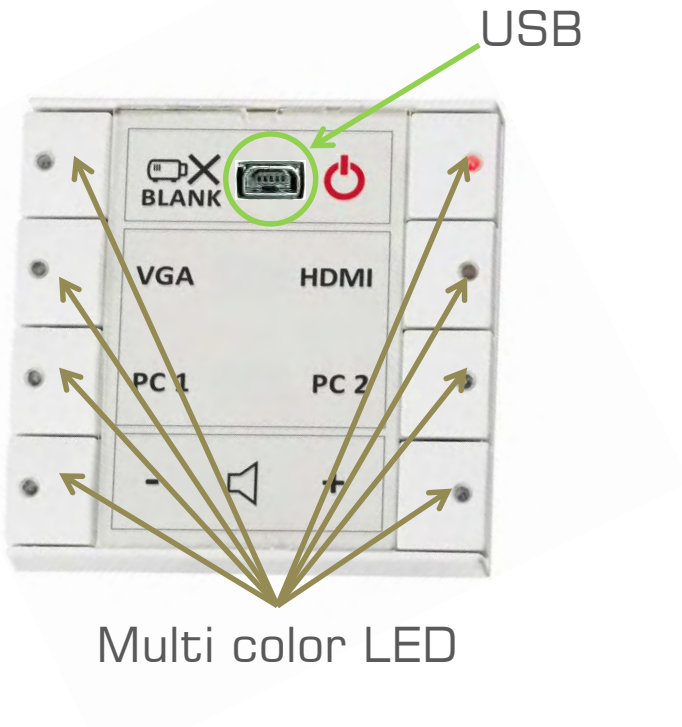
USB
BLANK
VGA
HDMI
PC 1
PC 2
Multi color LED

Graphical interfaces

Build a custom graphical interface
or
use the templates in the software
for easy and quick installs

Neets Control – TanGo

Touchpad controller

Neets Control – TanGo

benefits for the integrator

- Touchpad control through Browser, iOS or Android devices
- Power over Ethernet – Power in to drive the TanGo and PoE out for a PoE tablet
- Email notifications and warnings
- 5 RS-232 ports or 4 IR ports
- Ethernet port - used for controlling 10 LAN + 8 Neets devices
- 4 Low voltage relays for controlling screens, lifts or curtains.
- IR learner built into the front for easy IR code learning
- 1 front USB port – for configuration, uploading and downloading project files
- Easy installation – Fits in Neets Rack Shelf or mounted on plane surface

Included: Configuration through our free and no-license software: Neets Project Designer

Neets Control – TanGo

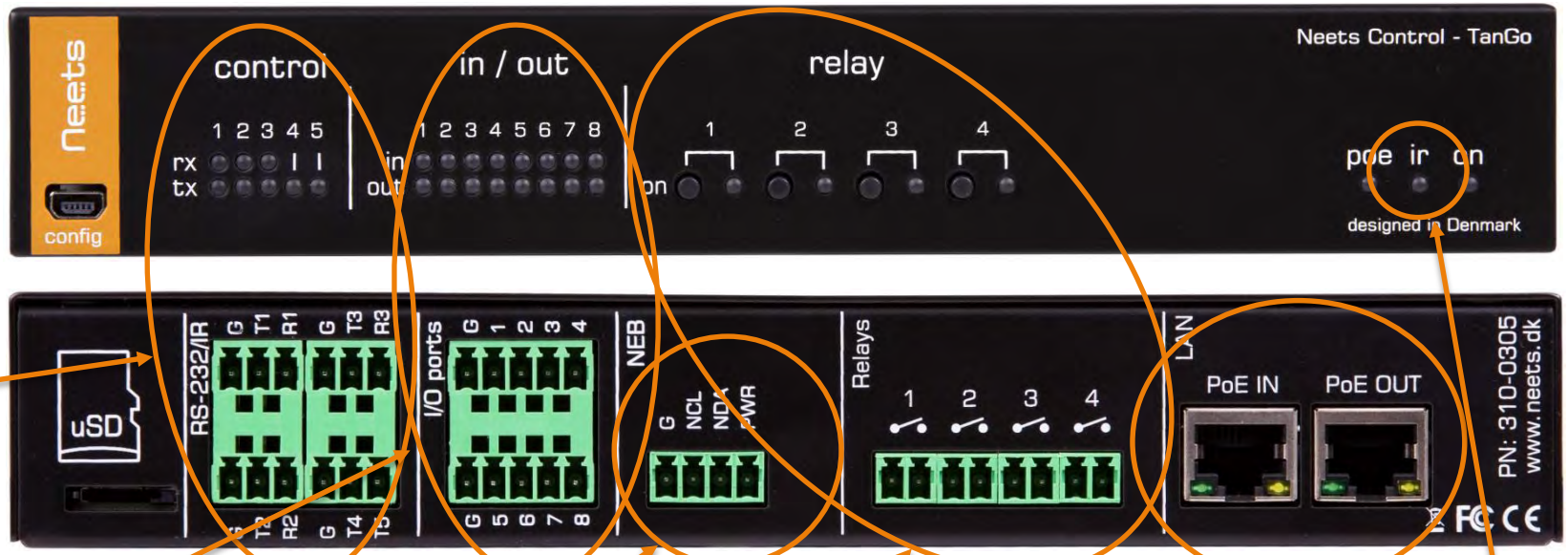

3 Bi-directional &
2 Uni-directional
Serial ports
Or 10 IR devices

Infrared learner

8 General purpose I/O's

NEB for up to 5 units
- Keypad
- Level control
- Expansion Board

4 low voltage relays
- 30 Volts
- 0,5 Amps
- Normally Open

PoE IN for powering the TanGo
Poe OUT to power a PoE device
Such as:
- Touch Displays
- Neets Pre-Amplifier
- Neets SieRRa II
- Wireless Access Points
- Or other PoE devices

Neets Control – AlFa II

Intuitive control of meeting and videoconference rooms

we make AV control systems -just smarter

Neets Control – AlFa II

benefits for the integrator

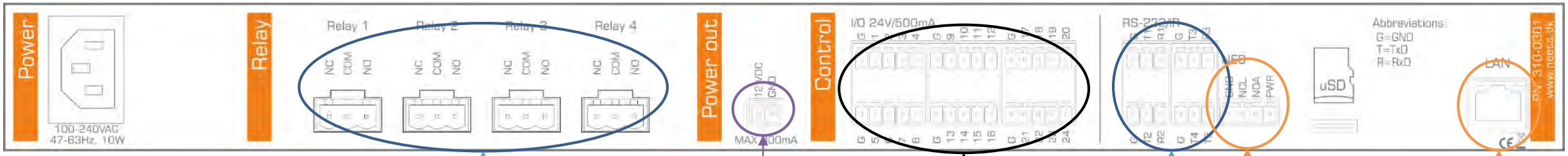

- 3 Bi-directional RS-232 or 6 IR ports
- 2 Uni-directional RS-232 or 4 IR ports
- 1 Ethernet port and 10 LAN devices
- 24 General Purpose I/O ports
- 12VDC for external devices
- 4 built-in Relays (230V / 8A)
- 1 NEB port (Neets Expansion Bus) - add 5 NEB extensions

IEC Mains Adaptor makes it easy to forward power to other products in a rack cabinet

Included: Configuration through our free and no-license software: Neets Project Designer

Neets Control – AlFa II

benefits for the integrator

- Provides users with one-touch control of a multitude of AV and additional device functions.
- Full LED feedback and overview on front
- Test the relays directly from the front while installing
- Create custom graphical user interface designs directly in Project Designer

Neets Control - DelTa

19” AV Control System with Integrated Audio Mixer

Neets Control – DelTa

benefits for the integrator

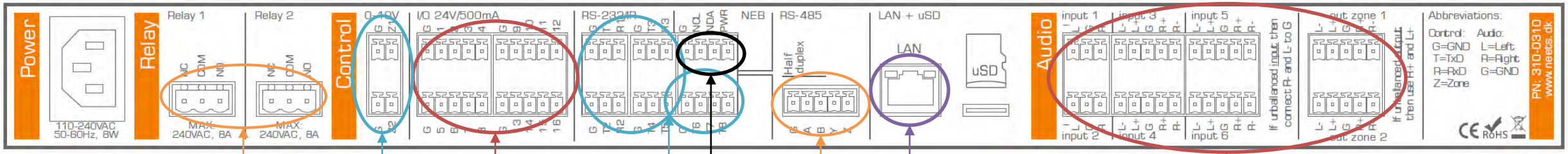

- 3 Bi-directional RS-232
- 5 Uni-directional RS-232 or 10 IR ports
- 1 RS-485
- 1 Ethernet port which can control 10 LAN devices
- 16 General Purpose I/O ports
- 2 built-in Relays (230V / 8A)
- 2 0-10V outputs
- 1 NEB port (Neets Expansion Bus) - add 5 NEB extensions
- Built-in AudioMixer – 6 in / 2 out

Included: Configuration through our free and no-license software: Neets Project Designer

Neets Control – DelTa

benefits for the integrator

- 19” AV Control System with Integrated Audio Mixer including balanced in and outputs
- Full control of more than 26 devices and expandable through 5 x NEBs (Neets Expansion Bus)
- Cost effective, all-in-one solution including Lighting Control Feedback functions from 14 sources
- Controlled via web browser, iOS or Android device
- Easily configured through USB, LAN or RS-232 in the new Neets Project Designer
- Full LED feedback and overview on front

Neets – Touch Panel

7” Dedicated Touch Panel

Neets – Touch Panel

- 7 Inch - 120x180x16mm
- 1024 x 595 resolution
- Wall and table mounting
- Magnetic snap-mount
- PoE Powered – one cable only
- Preinstalled with Neets App
- Wall mount fits all 1-gang back boxes
- Table mount can be fixed to the table

we make AV control systems -just smarter

Amplification

Controllable amplifiers with very high sound quality

Neets Audio Amplifiers

multi input amplifiers with RS-232

Neets Audio Amplifier – 2:25

- 2 x 25W @ 8 ohm Class D audio amplification
- Bridgemode: 1x34 Watts @8 ohm/1x56 Watts @4 ohm

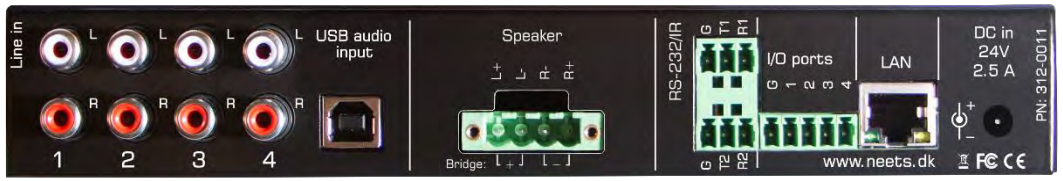

Neets Preamplifier

- Balanced outputs
- POE + 12 volts breakout to control system

Common features

- 4 x stereo line inputs + USB audio
- 2 x RS-232 ports
- 4 General Purpose Input/Outputs
- RS-232 loop-through or breakout with LAN control
- Easy setup with Project Designer
- 3 band equalizer
- Auto Power OFF/ON
- Two fits side by side in the Neets Rack Shelf or freely mountable on wall or ceiling

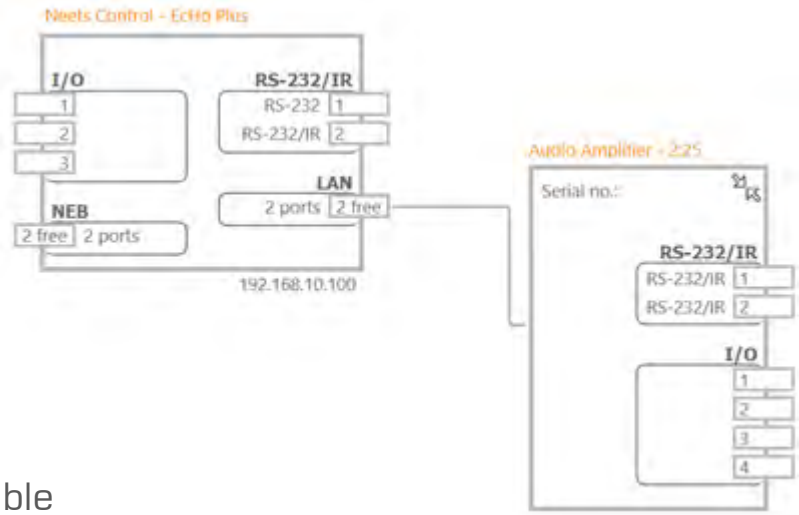

Neets Rack Shelf

1U Rack Shelf for easy mounting

Neets Rack Shelf is a 1U rack shelf and it is designed to fit the Neets Audio Amplifier – 2:25 and Neets Audio Preamplifier.

The Rack Shelf has a great usability, because of its depth only being 30 cm. and offer easy mounting of non-standard equipment into standard 19” rack systems.

Holds combinations of 1U, 1U half-rack, one-third-rack, or quarter-rack width Neets products.

Available in: black powder coating

Weight Capacity: 5 kg.

Dimensions: 30 x 43,9 cm. (d x w)

Shipping – April 2016

Neets Audio Amplifier - 120

19” audio amplifier with ICEpower®

- 19” audio amplifier with robust ICEpower® amplification
- ICEpower® is an independent subsidiary of Bang & Olufsen a/s.
- Engineered in Denmark, they deliver robust power, full bandwidth response and extremely low distortion with 90% efficiency.
- Energy-saving design with auto on/standby built for reliability

BANG & OLUFSEN

Neets Audio Amplifier - 120

19” audio amplifier with robust ICEpower® amplification

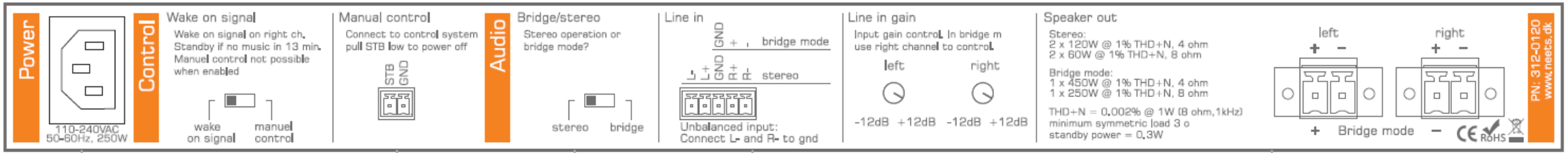

- 2 x 120W @ 4Ω audio amplifier - power to drive larger room systems
- High-power bridged mono mode - 1 x 450W @ 4Ω
- Outstanding audio quality, low distortion and full audio bandwidth response
- Flexible output modes with discrete two-channel or bridged mono for higher power
- Easy installation with inputs and outputs on Euroblock connectors
- Universal power supply which operates on any AC line current (110-230V)
- Short circuit, over-current and thermal protection

Switching Control

Control relays and USB signals – just smarter

Neets USB Switches

simple switch between PCs

- Allows easy switching between a fixed main computer and a laptop
- Supports USB 2.0 standard
- No software installation required
- Switch responds to external command or data signal presence
- Can be mounted in trunking system
- Simply press a button or connect and start second computer

Additional Features on USB Switch 2:

Built-in Extender: Extends cable length up to 10 meters on each side of the switch

Power Switch Delay: Cuts power for 2 sec when switching between ports

so the projector recognizes the change of computer

USB Switch 1

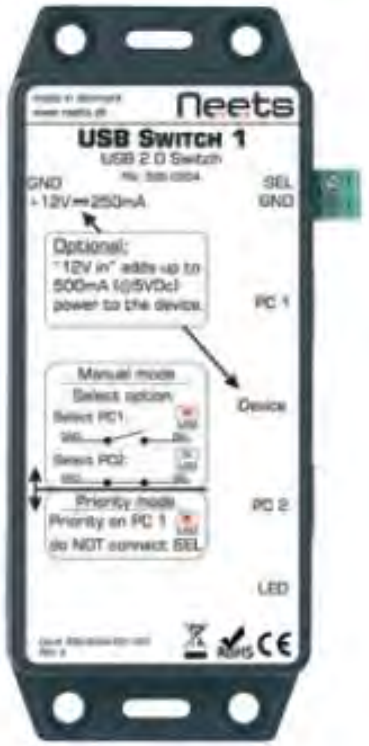

USB Switch 2

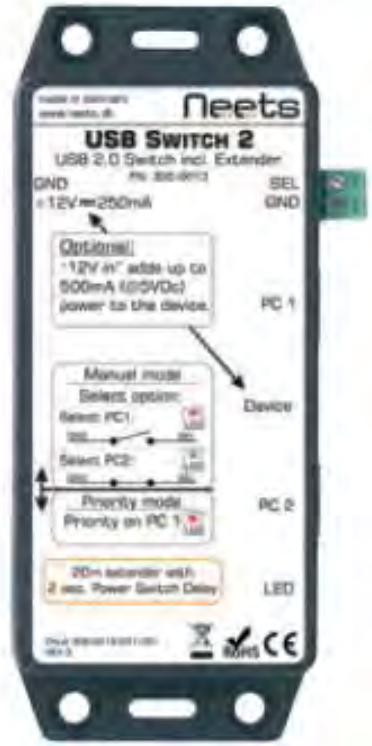

Neets Switching Relay - 1

cost effective reduction of stand-by power

- Cuts power - 0 Watt standby
- Minimize risk of fire
- Environmentally friendly
- Interconnects all the wiring - junction box

Neets Switching Relay - 2

high quality switching relay

- Two relays - Control for multiple devices, including screens and room lighting/darkening
- Two control inputs
- Direct screen control
- High or low voltage
- Built-in 12 V power supply
- Test buttons with LED status indication

Neets Switching Relay - 2

Neets

high quality switching relay

Using binders
to fix the wires

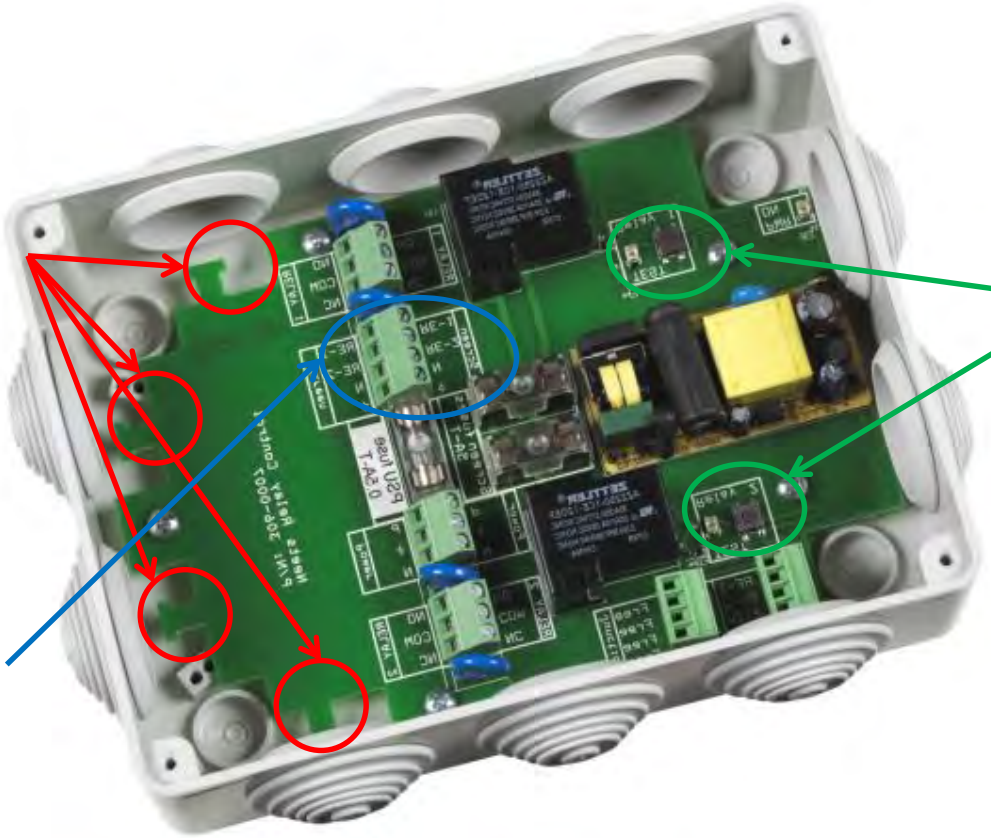

Test buttons
and led

Screen mode

Neets Switching Relay - 4

high quality switching relay

- Four relays - Control for multiple devices, including screens and room lighting/darkening
- Four I/O ports - flexible control for AV and auxiliary devices
- LAN to RS-232 breakout - adds two additional RS-232 ports to the system
- Built-in 12 V power supply
- Test buttons with LED status indication
- Configuration through RS-232 or LAN (NEW)
- Fully integrated into Neets Project Designer and compatible with 3rd party systems

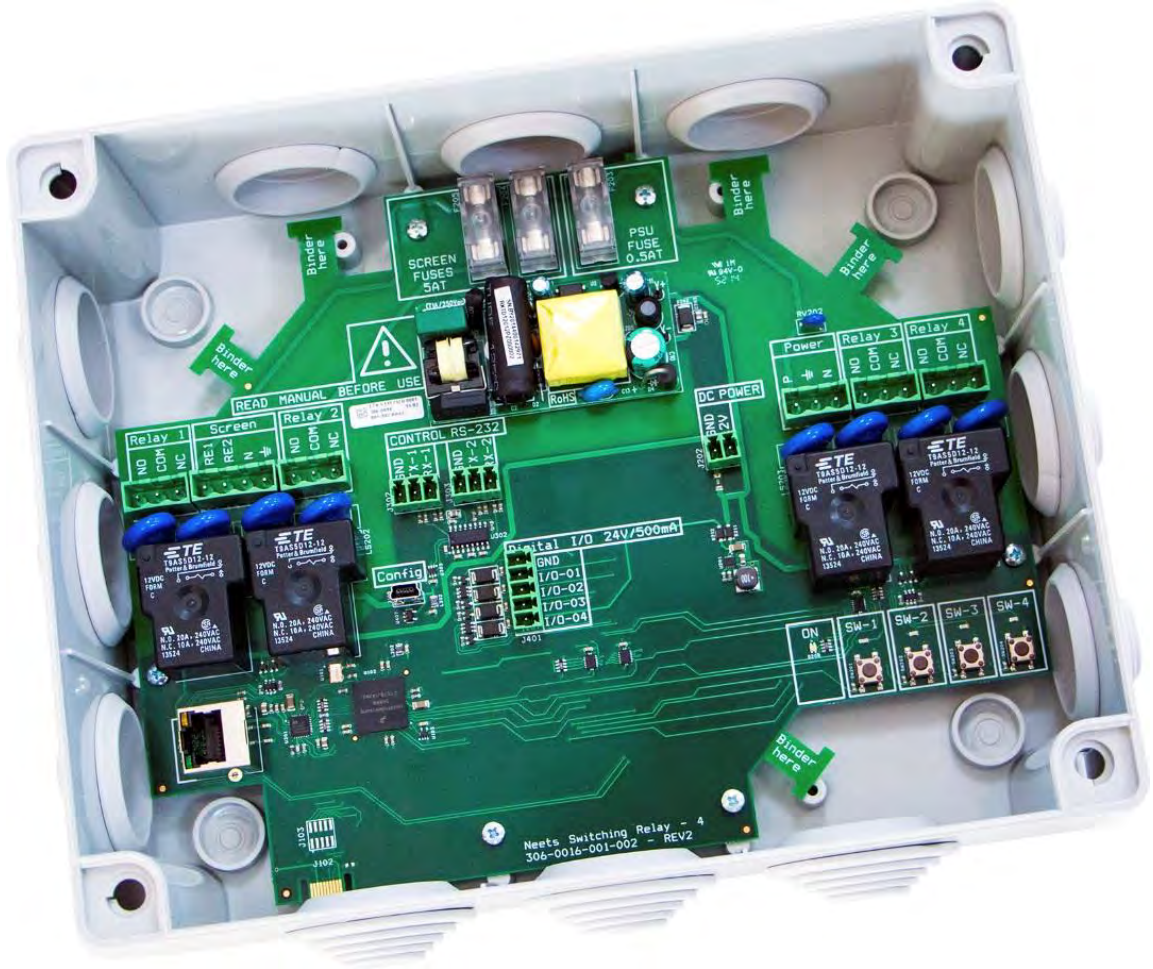

Neets Switching Relay - 4

high quality switching relay

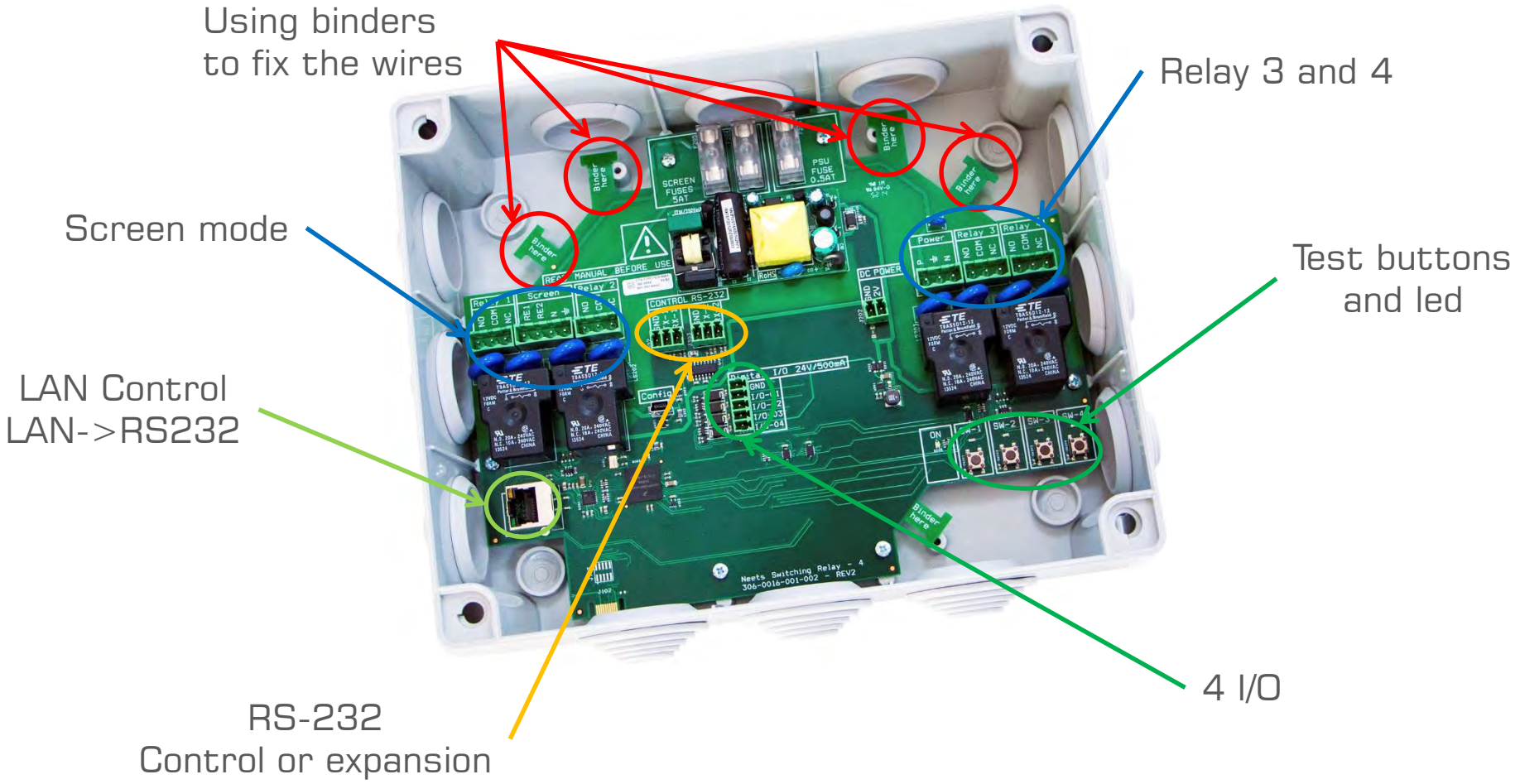

Neets Switching Relay - 8

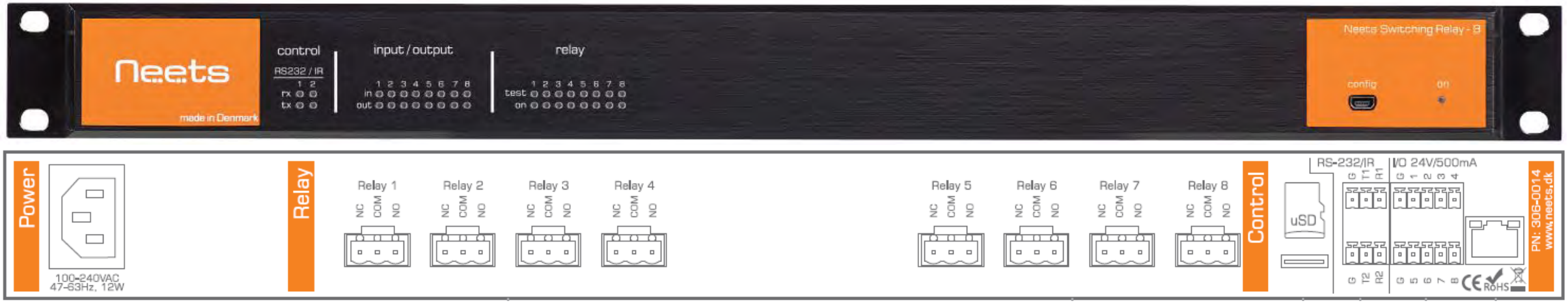

- 8 relays - Control for multiple devices, including screens and room lighting/darkening
- High or low voltage - switching for high-voltage AC or low voltage DC
- Test buttons with LED status on front
- Configuration through RS-232 or LAN
- Fully integrated into Neets Project Designer and compatible with 3rd party systems

IEC Mains Adaptor makes it easy to forward power to other products in a rack cabinet

Neets Switching Relay - 8

19” 8-relay switching solution

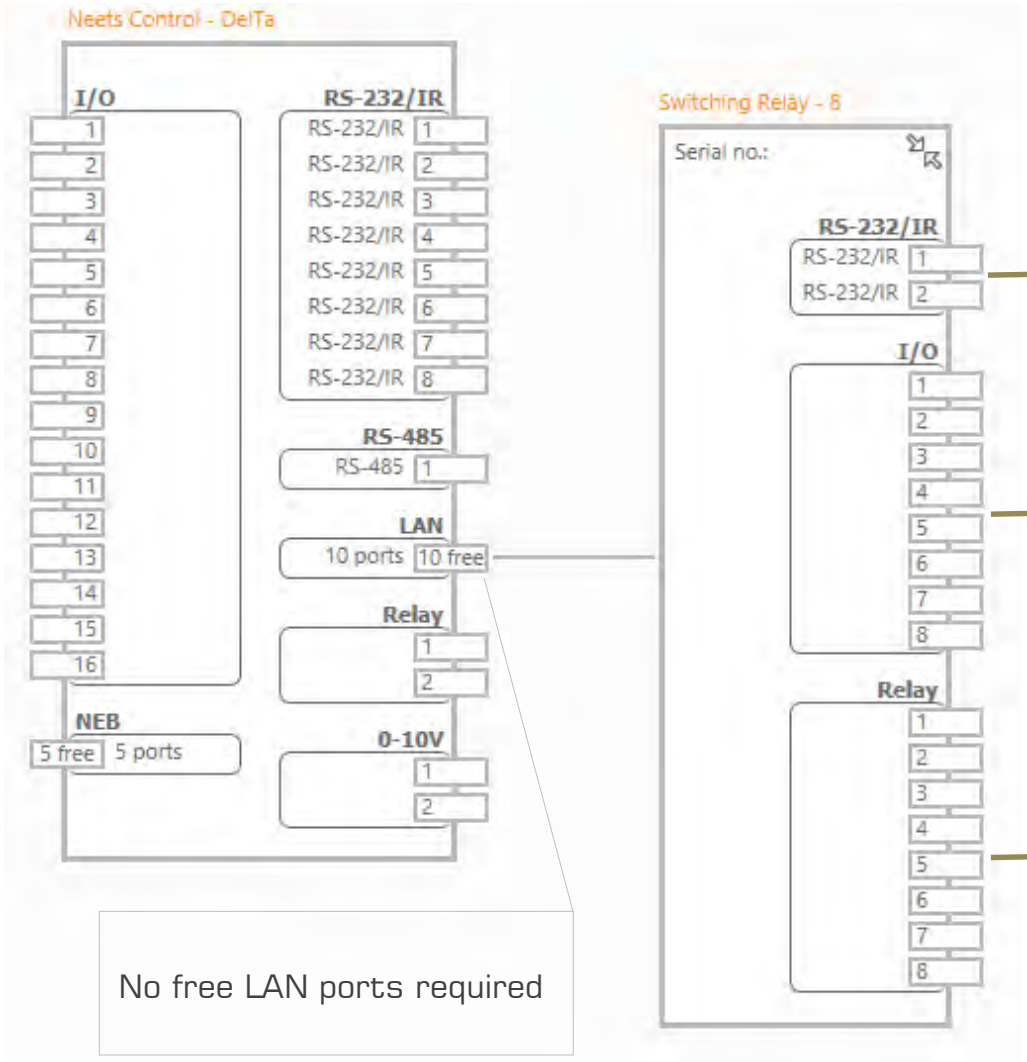

No free LAN ports required

LAN to RS-232 breakout - adds two additional RS-232 ports to the system

Eight I/O ports - flexible control for AV and auxiliary devices

Eight built in relays - switching for high-voltage AC or low voltage DC

IEC Mains Adaptor makes it easy to forward power to other products in a rack cabinet

Tabletop Solutions

- Standard version connects HDMI, VGA, 3.5 mm audio mini-jack, network cable (RJ45), USB-A
- Direct-out 12V power supply for control system
- Cut-out template included
- Available in Power and NEB versions

Neets EasyConnect

benefits for the customer

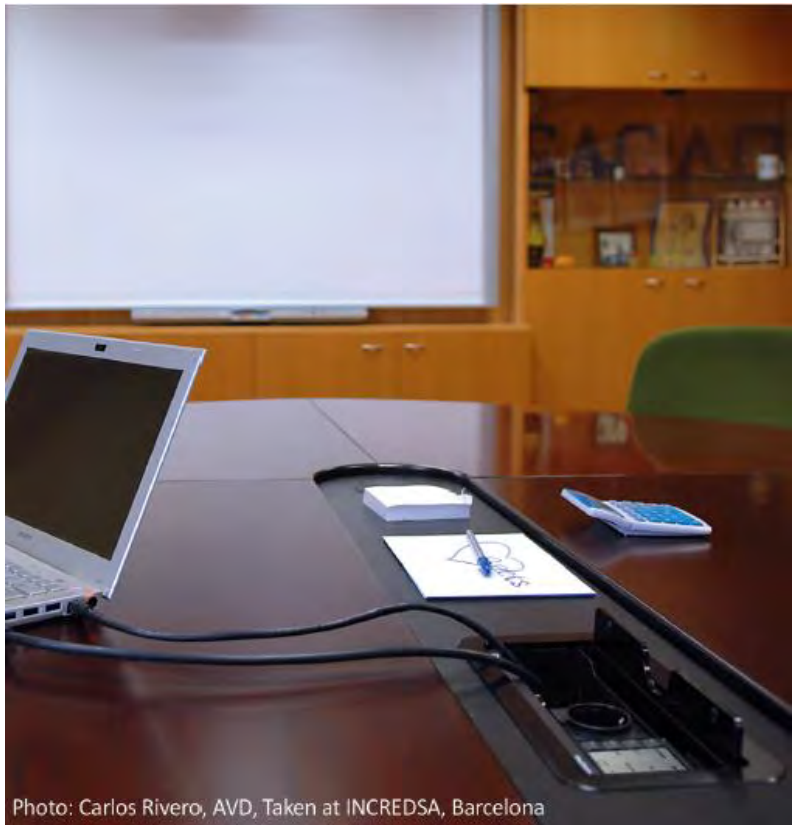
Photo: Carlos Rivero, AVD, Taken at INCREDSA, Barcelona

? or !

Easy Connect
Project Editor
Room Control
Audio Amplifiers
Android
Support
Events
OsCar
Touch interfaces
BraVo
ZuLu
Project
QueBec II
SieRRa
EcHo
DelTa
Panels
Neets
Software
Project Designer
Tabletop Solutions
News
Foxtrot
AIFa
Room Control
Seminars
Academy
IOS
FAQ